Mini Computer Master Clock with DCF 77 or GPS radio control for up to 16 slave clocks

Model HN 50

Ideal for the realization of small clock systems with indoor, outdoor and advertising clocks by means of advantageous price / performance relation. Up to 16 slave clocks can be connected. The compact construction enables wall mounting or integration in switching cupboards on 30 mm DIN bars.

The Mini Computer Master Clock in highest up-to date technology operates fully electronic and maintenance-free and disposes of a potential-free switching contact. The programming is carried out over a 2-line LCD display. The output voltages 12/24 V for the impulse line can be selected.

Technical Data

HN 50

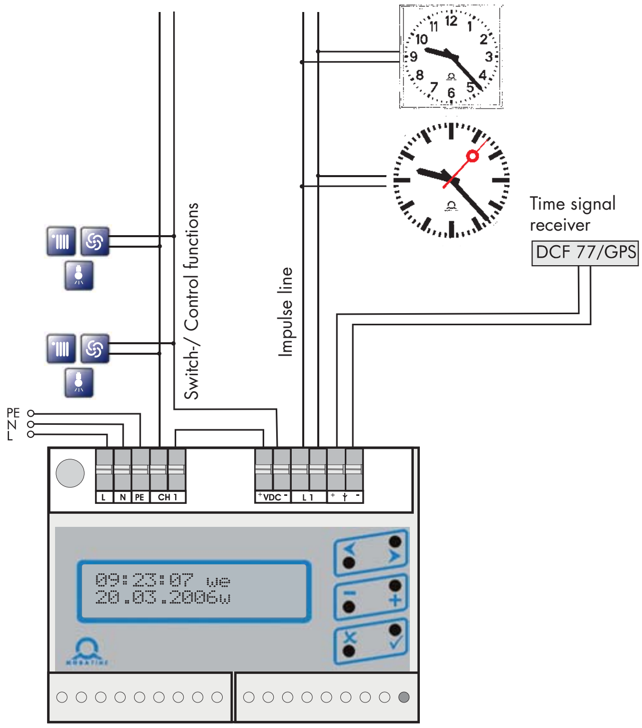

Model	HN 50
Slave clock line/Line voltage	1 slave clock line for polarized minute, half-minute or second impulses, 24 V=/12 V=, selectable
Line current/Approx. number of connectable slave clocks	150 mA, short-circuit proof/16
Impulse length/pause, minute or half-minute impulses	1,5 s/1,5 s configurable
Impulse length/pause, second impulses	0,3 s/0,2 s configurable
Data back-up at mains failure	about 5 years by lithium battery
Display	2-line LCD display with 2 x 16 characters, alphanumeric
Operation	Operation control by means of 6 push buttons
Mains power supply/Capacity	230 VAC ±10%, 50 Hz/about 20 VA
DC-supply (instead of mains supply)	12/24 VDC/about 40 mA
Accuracy on quartz basis (at about 20 °C) radio controlled	±0,1 s per day ±20 ms
Operation temperature	–30 °C to +70°C, max. 95% relative humidity, without condensation
Switching circuit	potential-free closing contact 250 VAC/6 A, 1.500 VA
Switching program/programming	100 weekly programs with up to 1.000 program lines (on, off, Signal), channel programming (date dependent, yearly programming)
DC output	12 V or 24 V, max. 200 mA
Particular functions	Astronomic calendar, manual control, timer function, holiday calendar
Wall housing Dimensions/Weight/Protection class	106 x 90 x 58 mm/0,6 kg/IP 20 (combined housing for wall and DIN bar mounting) 140 x 165 x 74 mm/0,8 kg/IP 40 145 x 240 x 113 mm/1,25 kg/IP 65
Accessories / Options	
DCF 77 radio time code receiver	DCF 450, 2 wire cable, 10 m connection cable, IP 54
GPS time signal receiver	GPS 4500, 4 wire cable, 10 m connection cable, IP 54
Back-up battery pack	BP ETC, 24 V/2.3 Ah